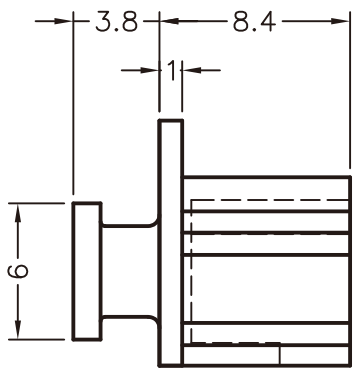

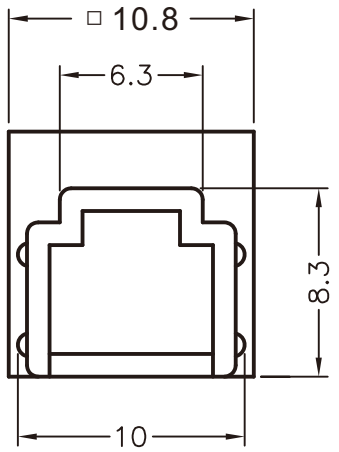

NOTE:D